DRIVE 275A

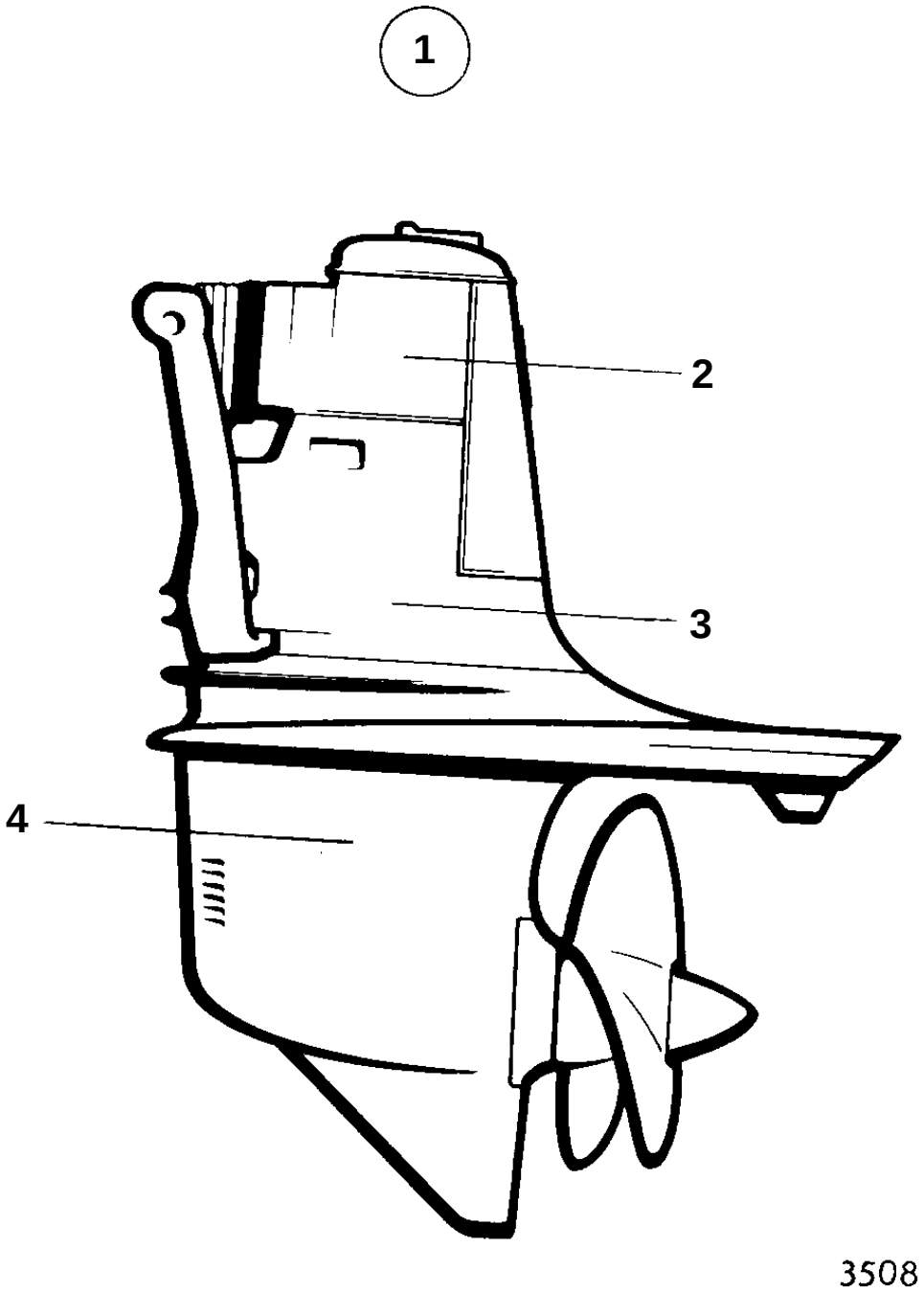

DRIVE 275A

REF	PART NO.	QTY	DESCRIPTION		SEE SEC.	NOTES
1	853574	1	Drive			RATIO 1,61:1. REPLACED BY DRIVE UNIT SP-A/MT 854013
2		1	· UPPER GEAR UNIT		04C-0150	
3		1	· INTERM HOUSING		04C-0250	
4		1	· LOWER GEAR UNIT		04C-0375	
	875192	1	Gasket kit			SEE GROUP 10